TEHNIČNI LIST – DIMENZIJE

HIDROMOTORJI MV

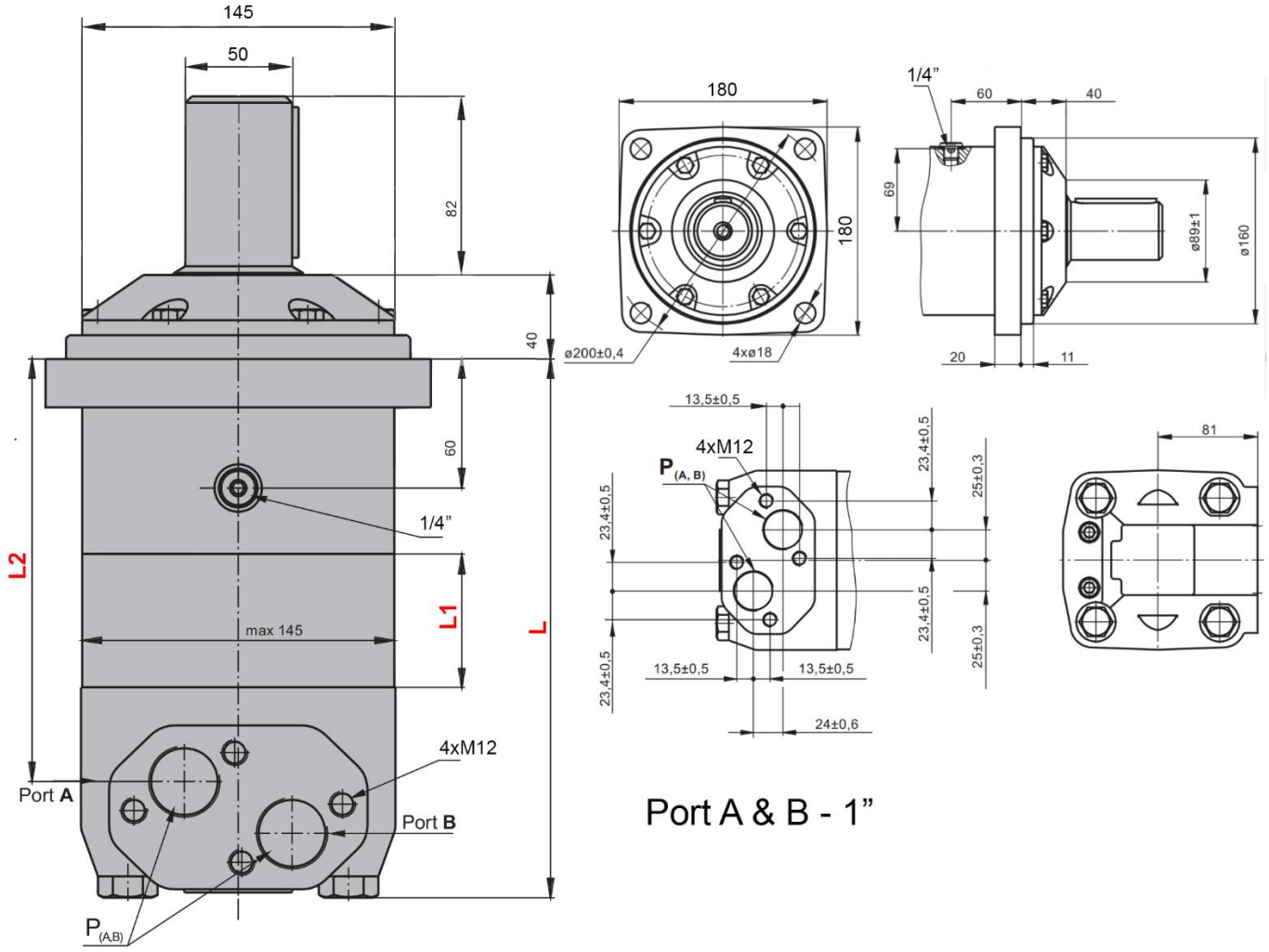

Port A & B - 1”

	L	L1	L2
	(mm)		
MV 315	214,5	22	160
MV 400	221,5	29	167
MV 500	229,5	37	175
MV 630	240	47,5	186
MV 800	254	61,5	200

Tehnični podatki

		MV 315	MV 400	MV 500	MV 630	MV 800
cm/vrtljaji		314,5	400,9	499,6	629,1	801,8
Vrtljaji (rpm)	konstantni	510	500	400	320	250
	s prekinitvami	630	600	480	380	300
Navor (Nm)	konstantni	87,3	118	146	166	188
	s prekinitvami	111	141	176	194	211
	max.	129	164	205	221	247
Moč (kW)	konstantna	42,5	53,5	53,5	48	42,5
	s prekinitvami	51	64	64	56	48
Tlak (bar)	konstantni	200	200	200	180	160
	s prekinitvami	240	240	240	210	180
	max.	280	280	280	240	210
Pretok olja (L/min)	konstantni	160	200	200	200	200
	s prekinitvami	200	240	240	240	240
Priključni navoj		1"	1"	1"	1"	1"
Teža (kg)		31,8	32,6	33,5	34,9	36,5

Diagrami

MV 315

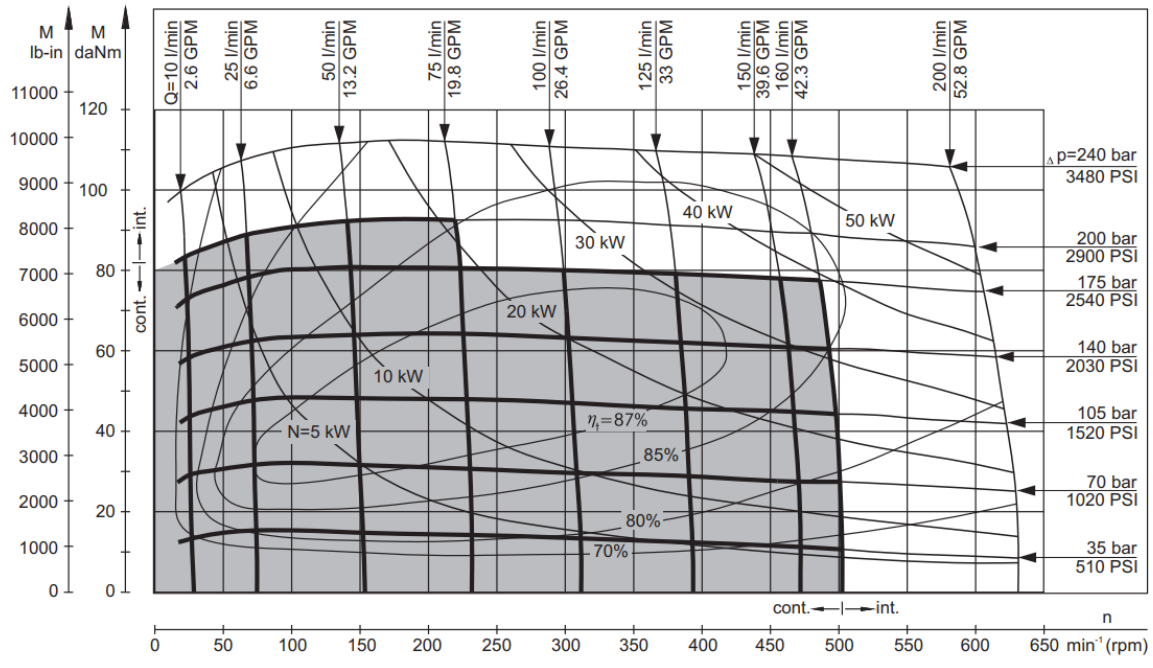

MV 400

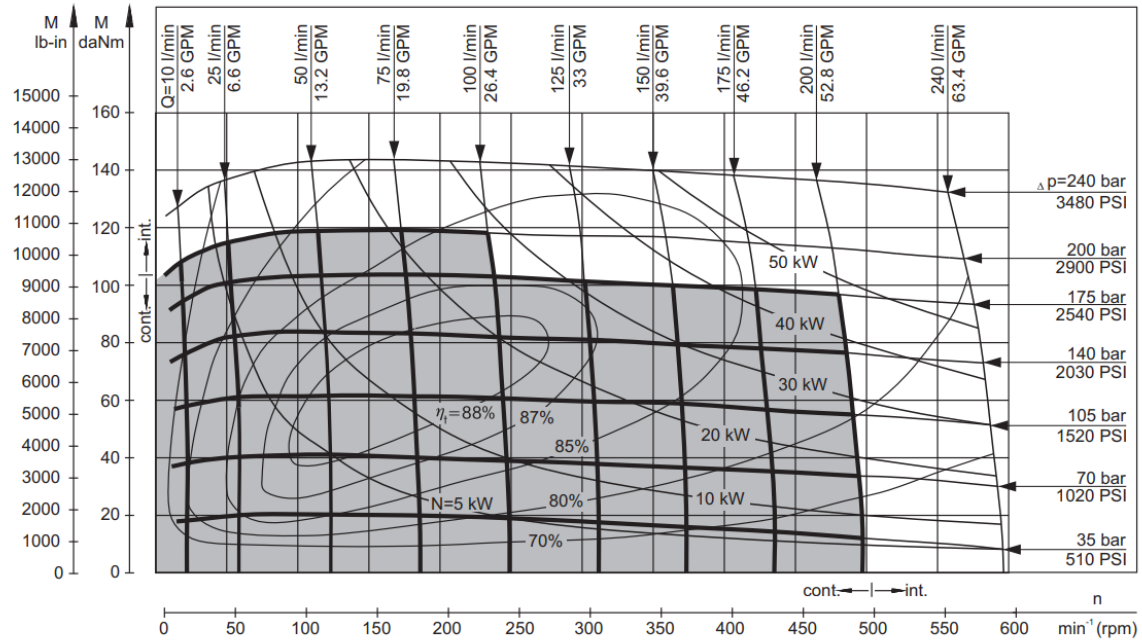
M lb-in
M daNm
Q=10 l/min 2.6 GPM
25 l/min 6.6 GPM
50 l/min 13.2 GPM
75 l/min 19.8 GPM
100 l/min 26.4 GPM
125 l/min 33 GPM
150 l/min 39.6 GPM
175 l/min 46.2 GPM
200 l/min 52.8 GPM
240 l/min 63.4 GPM
Δp=240 bar 3480 PSI
200 bar 2900 PSI
175 bar 2540 PSI
140 bar 2030 PSI
105 bar 1520 PSI
70 bar 1020 PSI
35 bar 510 PSI
50 kW
40 kW
30 kW
20 kW
10 kW
N=5 kW
ηt=88%
87%
85%
80%
70%
cont. int.
n
min-1 (rpm)

MV 500

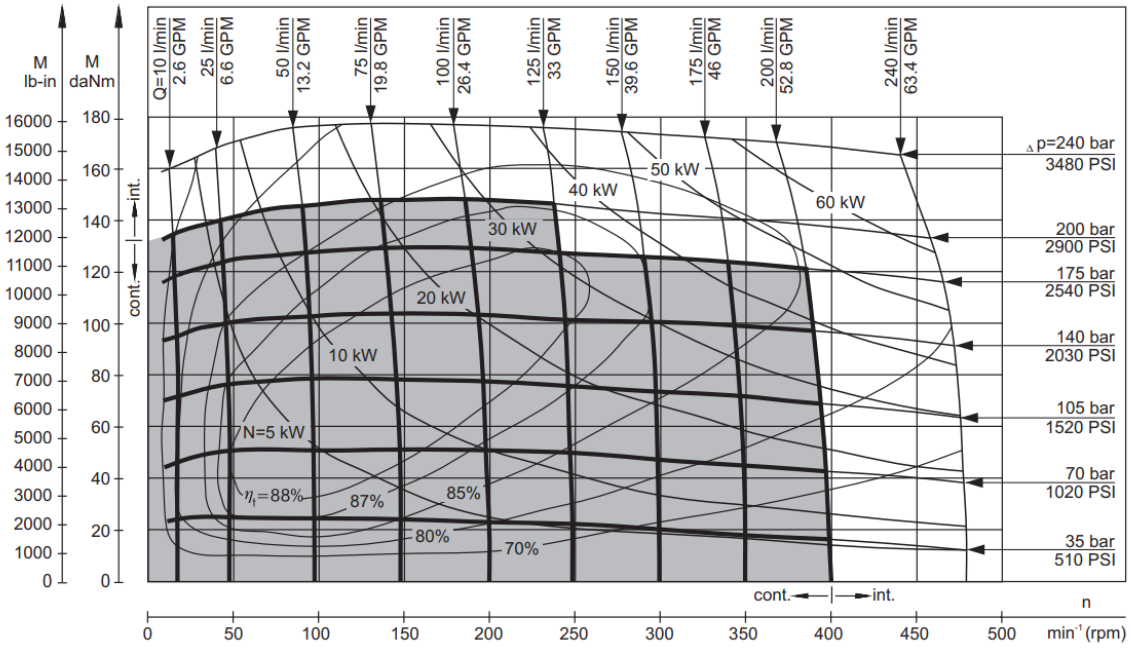
M lb-in
M daNm
Q=10 l/min 2.6 GPM
25 l/min 6.6 GPM
50 l/min 13.2 GPM
75 l/min 19.8 GPM
100 l/min 26.4 GPM
125 l/min 33 GPM
150 l/min 39.6 GPM
175 l/min 46 GPM
200 l/min 52.8 GPM
240 l/min 63.4 GPM
Δp=240 bar 3480 PSI
200 bar 2900 PSI
175 bar 2540 PSI
140 bar 2030 PSI
105 bar 1520 PSI
70 bar 1020 PSI
35 bar 510 PSI
60 kW
50 kW
40 kW
30 kW
20 kW
10 kW
N=5 kW
ηt=88%
87%
85%
80%
70%
cont. int.
n
min-1 (rpm)

MV 630

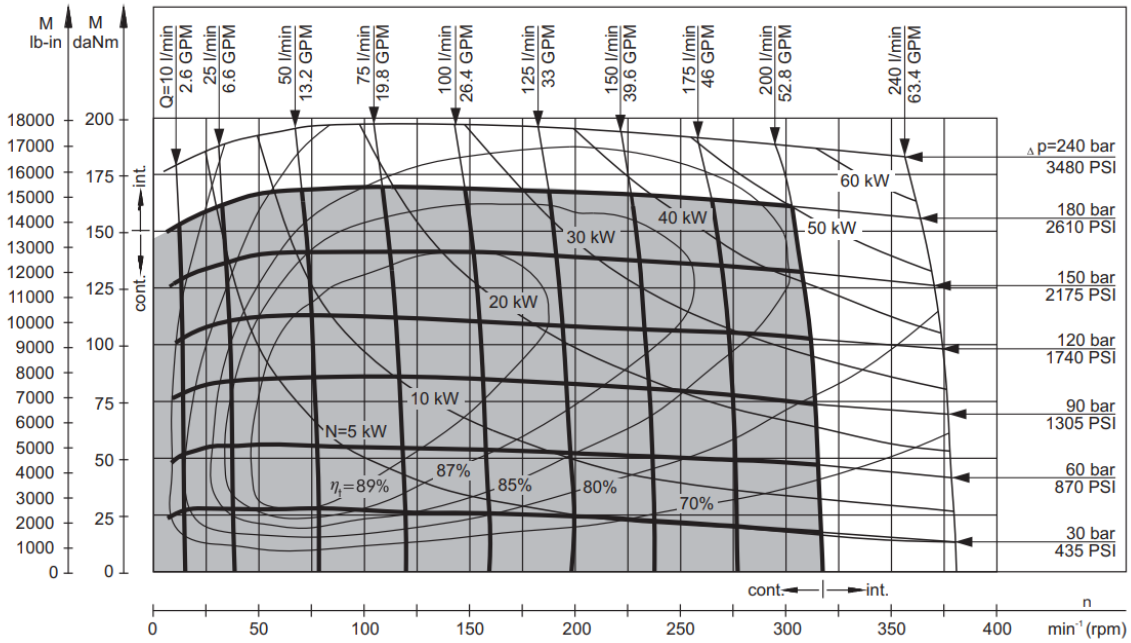
M lb-in
M daNm
Q=10 l/min 2.6 GPM
25 l/min 6.6 GPM
50 l/min 13.2 GPM
75 l/min 19.8 GPM
100 l/min 26.4 GPM
125 l/min 33 GPM
150 l/min 39.6 GPM
175 l/min 46 GPM
200 l/min 52.8 GPM
240 l/min 63.4 GPM
int.
cont.
60 kW
40 kW
50 kW
30 kW
20 kW
10 kW
N=5 kW
87%
85%
80%
70%
η_t=89%
Δp=240 bar 3480 PSI
180 bar 2610 PSI
150 bar 2175 PSI
120 bar 1740 PSI
90 bar 1305 PSI
60 bar 870 PSI
30 bar 435 PSI
cont. int.
n
min^{-1} (rpm)

MV 800

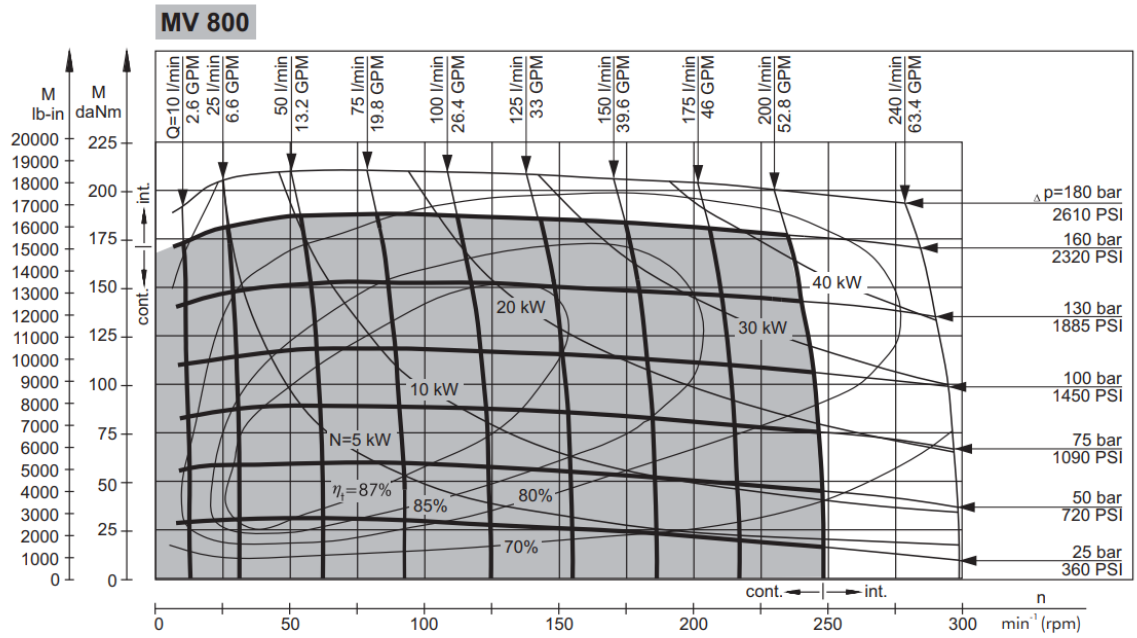
M lb-in
M daNm
Q=10 l/min 2.6 GPM
25 l/min 6.6 GPM
50 l/min 13.2 GPM
75 l/min 19.8 GPM
100 l/min 26.4 GPM
125 l/min 33 GPM
150 l/min 39.6 GPM
175 l/min 46 GPM
200 l/min 52.8 GPM
240 l/min 63.4 GPM
int.
cont.
40 kW
20 kW
30 kW
10 kW
N=5 kW
87%
85%
80%
70%
η_t=87%
Δp=180 bar 2610 PSI
160 bar 2320 PSI
130 bar 1885 PSI
100 bar 1450 PSI
75 bar 1090 PSI
50 bar 720 PSI
25 bar 360 PSI
cont. int.
n
min^{-1} (rpm)